Global Journal of Pure and Applied Mathematics.
ISSN 0973-1768 Volume 13, Number 4 (2017), pp. 1135–1142

http://www.ripublication.com/gjpam.htm

Total Edge Irregularity Strength of Honeycomb Torus Networks

Indra Rajasingh
Professor, School of Advanced Sciences,
VIT University, Chennai 600 127, India.

S. Teresa Arockiamary
Assistant Professor, Department of Mathematics,
Stella Maris College, Chennai 600 086, India.

Abstract

Given a graph $G(V, E)$ a labeling $\partial : V \cup E \to \{1, 2, \ldots, k\}$ is called an e*dge irregular total k-labeling* if for every pair of distinct edges uv and xy, $\partial(u)+\partial(uv)+\partial(v) \neq \partial(x)+\partial(xy)+\partial(y)$. The minimum k for which G has an edge irregular total k-labeling is called the total edge irregularity strength. The *total edge irregular strength* of G is denoted by $tes(G)$. In this paper we examine the honeycomb torus network which is a well known interconnection network and obtain its total edge irregularity strength.

AMS subject classification: 05C78.
Keywords: Irregular total labeling, Irregularity strength, Interconnection networks, Honeycomb networks, Torus networks, Labeling.

1. Introduction

A basic feature for a system is that its components are connected together by physical communication links to transmit information according to some pattern. Moreover, it is undoubted that the power of a system is highly dependent upon the connection pattern of components in the system. A connection pattern of the components in a system is called an *interconnection network*, or network, of the system.

Some interconnection network topologies are designed and some are borrowed from nature. For example hypercubes, complete binary trees, butterflies and torus networks are some of the *designed architectures*. Grids, hexagonal networks, honeycomb networks and diamond networks, for instance, bear resemblance to atomic or molecular lattice structures. They are called *natural architectures*.

The advancement of large scale integrated circuit technology has enabled the construction of complex interconnection networks. Graph theory provides a fundamental tool for designing and analyzing such networks. One of the main objectives of researchers is the application of Graph Theory to the study and design of interconnection networks.

Motivated by the notion of the *irregularity strength* and *irregular assignments* of a graph introduced by Chartrand et al.(refer [4]) in 1988 and various kinds of other total labelings, the *total edge irregularity strength* of a graph was introduced by Bača, Jendrol, Miller and Ryan [1] as follows: For a graph $G(V, E)$ a labeling $\partial : V \cup E \to \{1, 2, ..., k\}$ is called an *edge irregular total k- labeling* if for every pair of distinct edges uv and xy, $\partial(u) + \partial(uv) + \partial(v) \neq \partial(x) + \partial(xy) + \partial(y)$.

The minimum k for which G has an *edge irregular total k-labeling* is called the *total edge irregularity strength* of G. The *total edge irregular strength* of G is denoted by $tes(G)$.

We begin with few known results on *tes*(G).

Theorem 1.1. [1] Let G be a graph with m edges. Then $tes(G) \geq \left\lceil \frac{m+2}{3} \right\rceil$.

Theorem 1.2. [1] Let G be a graph with maximum degree Δ. Then $tes(G) \geq \left\lceil \frac{\Delta+1}{2} \right\rceil$.

Conjecture 1.3. [8] For every graph G with size m and maximum degree Δ that is different from K_5, the total edge irregularity strength equals $max\left\{\left\lceil \frac{m+2}{3} \right\rceil, \left\lceil \frac{\Delta+1}{2} \right\rceil\right\}$.

Conjecture has been verified for trees by Ivančo and Jendrol [8] and for complete graphs and complete bipartite graphs by Jendrol et al. in [9].

We have already proved that the bound given in Theorem 1 is sharp for honeycomb mesh network [13]. As our main result in this paper we have proved that the bound is not sharp for honeycomb torus network. Hence we have increased the bound by 2 and given an algorithm to prove the result.

2. Honeycomb network

It is known that there exist three regular plane tessellations, composed of the same kind of regular polygons: triangular, square and hexagonal. They are the basis for the designs of direct interconnection networks with highly competitive overall performance. Various research and development results on how to interconnect multiprocessor components have been reported in literature. Of the three regular tessellations of a plane with regular

polygons, the square tessellation is the basis for mesh-connected computers, which are widely studied in literature. The triangular tessellation is used to define hexagonal mesh multiprocessor, studied in [5, 11, 12, 14, 15, 16, 18]. Several sources [11, 12, 15] refer to the network as being "honeycomb" architecture. They begin with hexagonal tesselation but use cells(instead of vertices) as processors.

Honeycomb and diamond networks have been proposed as alternatives to mesh and torus architectures for parallel processing. When wraparound links are included in honeycomb and diamond networks, the resulting structures can be viewed as having been derived through a systematic pruning scheme applied to the links of 2D and 3D tori, respectively.

Honeycomb composites are used widely in the aerospace industry. Recent developments show that honeycomb structures are also advantageous in applications involving nanohole arrays in anodized alumina [10], microporous arrays in polymerthin films, activated carbon honeycombs [6] and photonic band gap honeycomb structures. Here, we study the honeycomb mesh interconnection network, based on the hexagonal tessellation.

Definition 2.1. The honeycomb network HC(r) is obtained from HC(r–1) by adding a layer of hexagons around the boundary of HC(r–1). The honeycomb network HC(1) is a hexagon. The honeycomb network HC(2) is obtained by adding six hexagons to the boundary edges of HC(1). The parameter r of HC(r) is determined as the number of hexagons between the center and boundary of HC(r).

Though $HC(r)$ is obtained by adding a layer of hexagons around the boundary of $HC(r-1)$, $HC(r)$ contains $HC(r-1)$ surrounded by a cycle $C(r)$ of length $12r-6$ with edges connecting them. The number of vertices and edges of $HC(r)$ are $6r^2$ and $9r^2-3r$ respectively.

3. Honeycomb Torus network

The Torus is one of the popular topologies for the interconnecting processors to build high performance multicomputers. Honeycomb torus network can be obtained by joining pairs of nodes of degree two of the honeycomb mesh. In order to achieve edge and vertex symmetry, the best choice for wrapping around seems to be the pairs of nodes that are mirror symmetric with respect to three lines, passing through the center of hexagonal mesh and normal to each of three edge orientations. Figure 1 shows how to wraparound honeycomb network of size three $HC(3)$ to obtain $HCT(3)$, the honeycomb torus of dimension three.

Stojmenovic [17] introduced three different honeycomb tori by adding wraparound edges on honeycomb meshes namely, the honeycomb rectangular torus, the honeycomb rhombic torus and the honeycomb hexagonal torus. Recently, these honeycomb tori, have been recognised as an attractive alternative to existing torus interconnection networks in parallel and distributed applications. The different honeycomb tori proposed by Stojmenovic are proved to be special cases of generalized honeycomb tori in [3]. They have proved that some generalized honeycomb tori are Hamiltonian. Honeycomb,

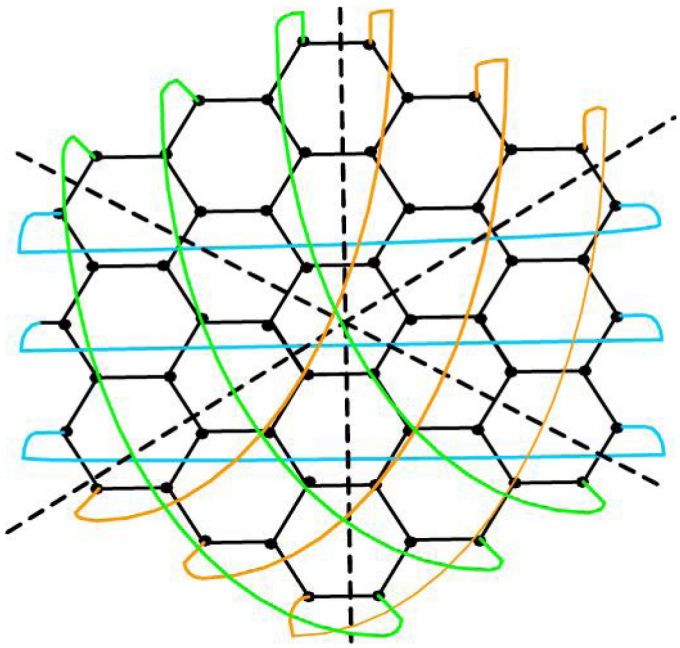

Figure 1: $HCT(3)$

hexagonal meshes and mesh connected computers belong to the same family of networks. $HCT(r)$ is obtained by adding a layer of hexagons around the boundary of $HC(r-1)$, with wraparound edges. The number of vertices and edges of $HCT(r)$ are $6r^2$ and $9r^2$ respectively.

3.1. Results

Lemma 3.1. $tes(HCT(2)) = 15$.

Proof. Let $HCT(2)$ be labeled as in Figure 2. It is easy to check that$tes(HCT(2)) = 15$.

Procedure $tes(HCT(r))$

Input: r-dimensional honeycomb torus, $HCT(r)$, $r \geq 3$.

Algorithm:

(1) Label the vertices and edges of $HCT(2) \simeq HC(2)$ without the wraparound edges as in Lemma 3.1.

(2) Label the vertices and edges of $HCT(r) \simeq HC(r)$, $r \geq 3$ without wraparound edges inductively as follows:

(3) Having labeled the vertices and edges of $H \simeq HC(r-1)$;

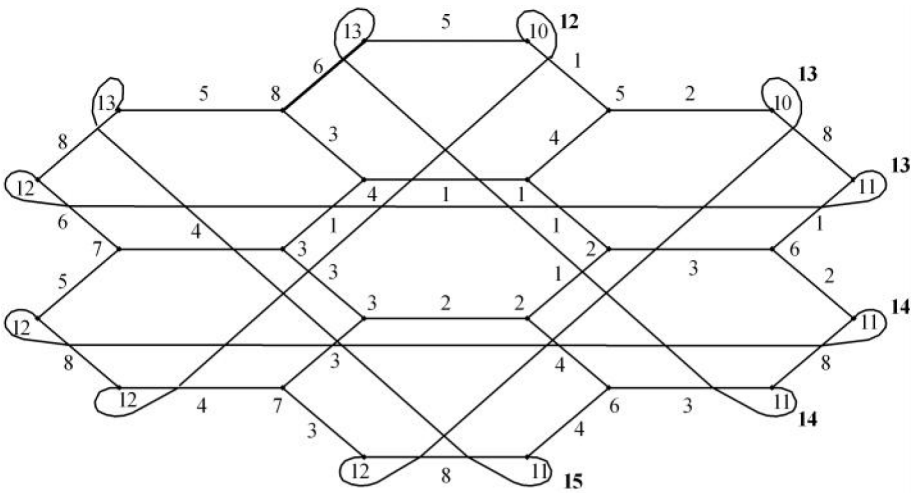

Figure 2: $tes(HCT(2)) = 15$

(a) Name the vertices of the cycle C in $HC(r-1)$ as $v_1, v_2, \ldots, v_{12(r-1)-6}$.

(b) Label the vertex on $C(r)$ at distance 1 from v_i on $C(r-1)$ as $l(v_i)+tes(HCT(r))-tes(HCT(r-1))-5$, and vertex at distance 2 from v_i on $C(r-1)$ as $l(v_i)+tes(HCT(r))-tes(HCT(r-1))$, $1 \leq i \leq 12(r-1)-6$.

(c) Moving in the clockwise direction the edges of $HCT(r)$ are traversed as follows. The edges of $HC(r)$ are traversed first and then the wraparound edges.

(i) Start at the spoke edge e_1 whose end vertex receives the label $tes(HCT(r-1))-5$ and is incident at the hexagon through which α_o line passes. The edge traversal follows in the clockwise direction, through all spoke edges say $e_1, e_2, \ldots, e_{3(2r-2)}$ till spoke edge e_1 is reached.

(ii) Edge traversal continues beginning with the left edge of e_1 and proceeds in the clockwise sense with consecutive left and right edges of e_i till all such edges are exhausted.

(iii) The edges e_j, $1 \leq j \leq 6$ on the outer cycle $C(r)$ are traversed in the clockwise direction starting at the edge whose vertex degree is 2 and is the end vertex of left edge of e_1.

(iv) Finally the wraparound edges which are the unvisited edges are traversed in a clockwise manner starting at the edge whose vertex degree is 3 and is incident to the left edge of e_1.

(v) If $e_i = (u_i, w_i)$ are the spoke edges with $l(u_i)$ and $l(w_i)$ then

$$l(e_i) = 3tes(HCT(r-1)) - 3 + i - 3r - l(u_i) - l(w_i).$$

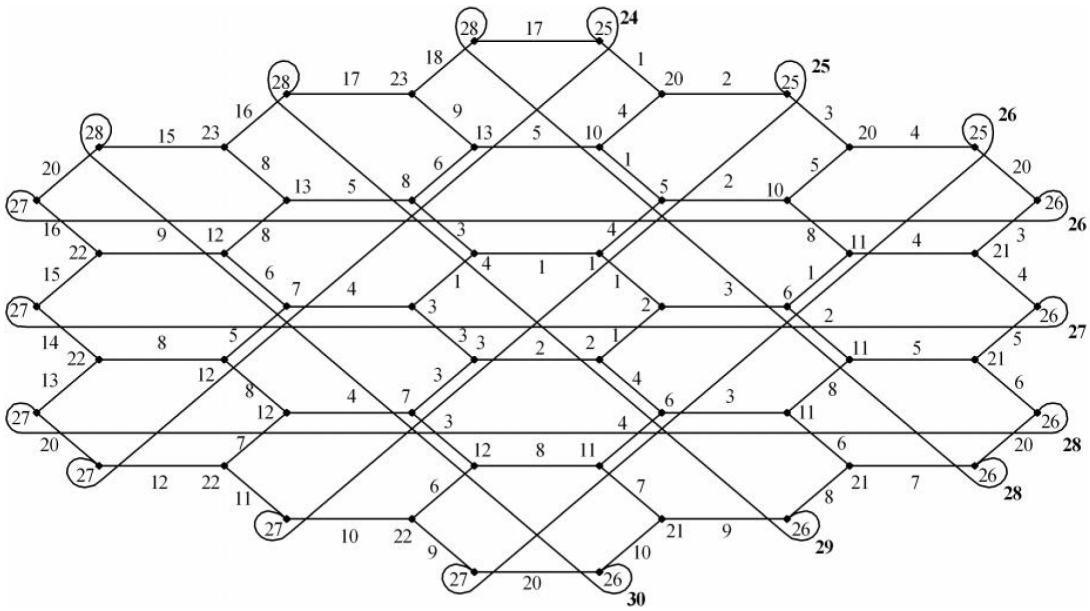

Figure 3: $tes(HCT(3)) = 30$

If $left(e_i) = (w_i, w_i^{'})$ and $right(e_i) = (w_i, w_i^{''})$ with $l(w_i)$, $l(w_i^{'})$ and $l(w_i^{''})$ then
$l(left(e_i)) = 3tes(HCT(r-1)) + i - l(w_i) - l(w_i^{'})$.
$l(right(e_i)) = l(left(e_i)) + 1$.
If $e_j = (u_j, v_j)$, $1 \leq j \leq 6$ are the outer cycle edges with $l(u_j)$, $l(v_j)$ then
$l(e_j) = 3tes(HCT(r)) - tes(HCT(r-1)) - 6 + j - l(u_j) - l(v_j)$.
If $e_i = (u_i, w_i)$ are the wraparound edges with $l(u_i)$ and $l(w_i)$ then
$l(e_i) = 3tes(HCT(r)) - 6 + i - 3r - l(u_i) - l(w_i)$.
End Procedure $tes(HCT(r))$.

Output: $tes(HCT(r)) \leq \lceil \frac{9r^2+2}{3} \rceil + 2$.

Proof of Correctness: We prove the result by induction on r. By actual verification, it is easy to check that the labels given in Figure 2 yield $tes(HCT(2)) = 15$. This proves the result when r = 2. Assume the result for $HCT(r$ - 1). Consider $HCT(r)$. Since the labeling of $H \simeq HCT(r-1)$ is an edge irregular k-labeling, it is clear that the labeling of $HCT(r)$ obtained by adding consecutive integers as in step 3 (c) is also an edge irregular k-labeling. Since the labels are consecutive, the sums of $HCT(r)$ are also consecutive integers which are clearly distinct. Labeling of $HCT(3)$ and $HCT(4)$ are shown in Figure 3 and 4. ■

Theorem 3.2. Let HCT(r) be a r-dimensional honeycomb torus network. Then $\left\lceil \frac{9r^2+2}{3} \right\rceil$

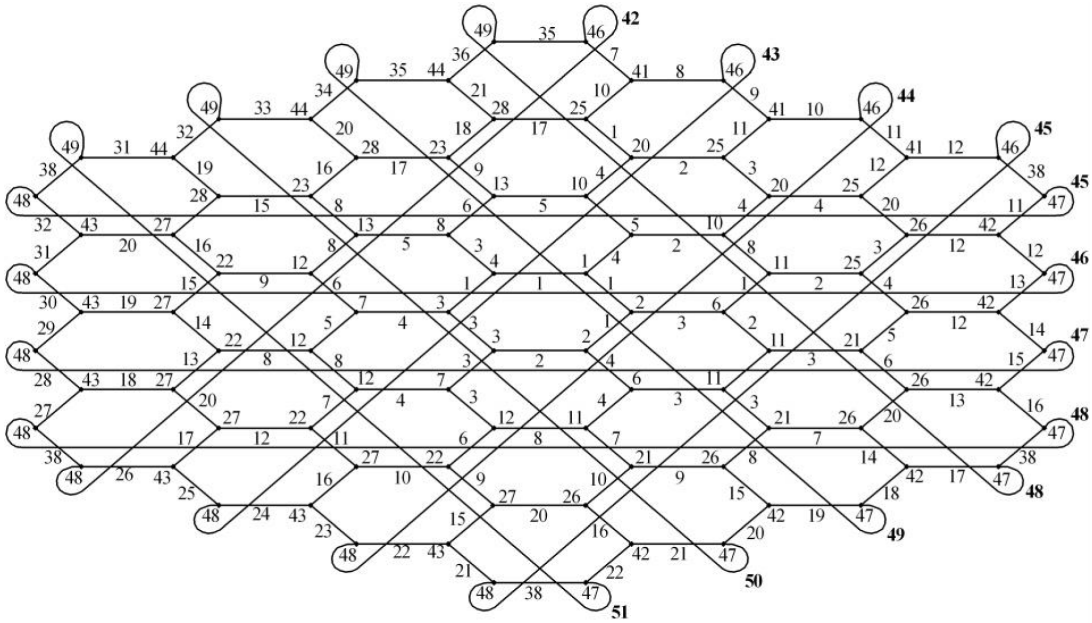

Figure 4: $tes(HCT(4)) = 51$

$$\leq tes(HCT(r)) \leq \left\lceil \frac{9r^2 + 2}{3} \right\rceil + 2, r \geq 2.$$

4. Conclusion

In this paper, we considered honeycomb torus network and proved that it is total edge irregular. Our study is extended to circulant networks and hexagonal networks.

References

[1] M. Bača, S. Jendrol, M. Miller and J. Ryan, On Irregular total labelings, Discrete Mathematics, 307, (2007), 1378–1388.

[2] R. Ben Natan and A. Barak, Parallel contraction of grids for task assignment to processor networks, Networks, 22, (1992), 539–562.

[3] H.J. Cho and L.Y. Hsu, Generalized honeycomb torus, Information Processing Letters, 86, (2003), 185–190.

[4] G. Chartrand, M. Jacobson, J. Lehel, O. Oellermann, S.Ruiz and F.Saba, Irregular networks, Congressus Numerantium, 64, (1988), 187–192.

[5] M.S. Chen, K.G. Shin and D.D. Kandlur, Addressing, Routing and Broadcasting in Hexagonal Mesh Multiprocessors, IEEE Transactions Computers, 39, (1990), 10–18.

[6] K.P. Gadkaree, Carbon honeycomb structures for adsorption applications, Carbon, 36(7), (1998), 981–989.

[7] J.A. Gallian, A Dynamic survey of graph labeling, The Electronic Journal of Combinatorics, #DS6, (2015).

[8] J. Ivančo and S. Jendrol, Total edge irregularity strength of trees, Discussiones Mathematicae Graph Theory, 26, (2006), 449–456.

[9] S. Jendrol, J. Miškuf and R. Soták, Total edge irregularity strength of complete graphs and complete bipartite graphs, Electronic Notes in Discrete Mathematics, 28, (2007), 281–285.

[10] H. Masuda and K. Fukuda, Ordered metal nanohole arrays made by a two-step replication of honeycomb structures of anodic alumina, Science, 268(5216), (1995), 1466–1468.

[11] D. Milutinovic, V. Milutinovic and B. Soucek, The Honeycomb architecture, Computer, 20(4), (1987), 81–83.

[12] V. Milutinovic, Mapping of neural networks on the honeycomb architecture, Proceedings IEEE, 77(12), (1989), 875–878.

[13] I. Rajasingh and S. Teresa Arockiamary, Total edge irregularity strength of honeycomb networks, International Journal of Computational and Applied Mathematics, 8(3), (2013), 213–220.

[14] G. Rote, On the connection between hexgonal and undirected rectangular systolic arrays, Lecture Notes in Computer Science, Springer-Verlag, 227, (1986), 70–83.

[15] B. Rolic and J. Silc, High performance computing on a honeycomb architecture, Proceedings of the second international ACPC parallel computation conference, Austria, Springer-Verlag, (1993), 22–28.

[16] K.G. Shin, Harts: A distributed real-time architecture, Computer, 24(5), (1991), 25–35.

[17] I. Stojmenovic, Honeycomb Networks: Topological Properties and Communication Algorithms, IEEE Transactions on Parallel and Distributed Systems, 8(10), (1997), 1036–1042.

[18] H.Y. Youn and J.Y. Lee, An efficient dictionary machine using hexagonal processor arrays, IEEE Transactions on Parallel and Distributed Systems, 7(3), (1996), 266–273.